Acacia Evolution

Concealed Shower Mixing Valve
With Universal Installation Box
WF-1322.709.50

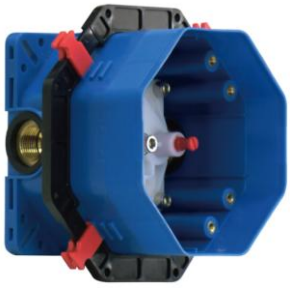

FEATURES

- Modern design that can fit with any style of bathroom
- Ceramic disc valve for a life time use
- Strong brass construction
- Nickel and chromium plating for durable finish
- With 2-way Diverter for Spout and Shower Head
- Without Shower Kits
- Flow Rate @ 0.1 MPa (W/o Shower) : 16.68 L/Min
- Included Universal Installation Box (WF-0625.000.99)

SPECIFICATIONS

- Concealed Shower Mixing Valve
- In-Wall Installation
- Plate Dimension : 150x150 mm

FINISHES AVAILABILITY

- Chrome (- CP)

AWARDS WON

- N/A

SHIPPING WEIGHT

- Product weight: 1.40 kg

STANDARDS CRITERIA

- GB 18145-2014

DIMENSIONAL DRAWING

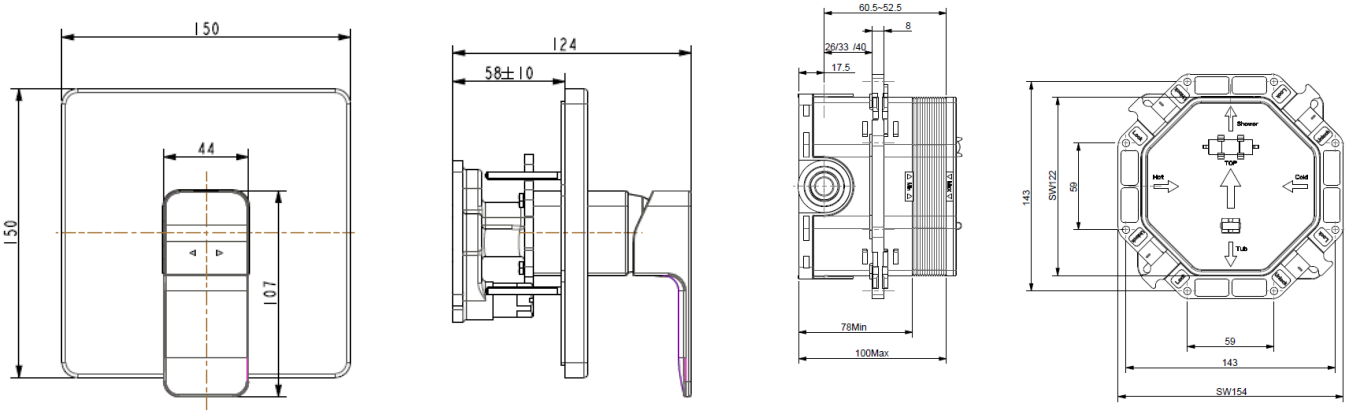

Universal Installation Box

This document is the property of American Standard. It can neither be reproduced, nor communicated, without authorization.
American Standard reserves the right to change dimensions and specifications without notice, we assume no liability for the use of obsolete dimensions.