CF-5626.501

Celia Single Hole Kitchen Faucet With Pull-out Spout

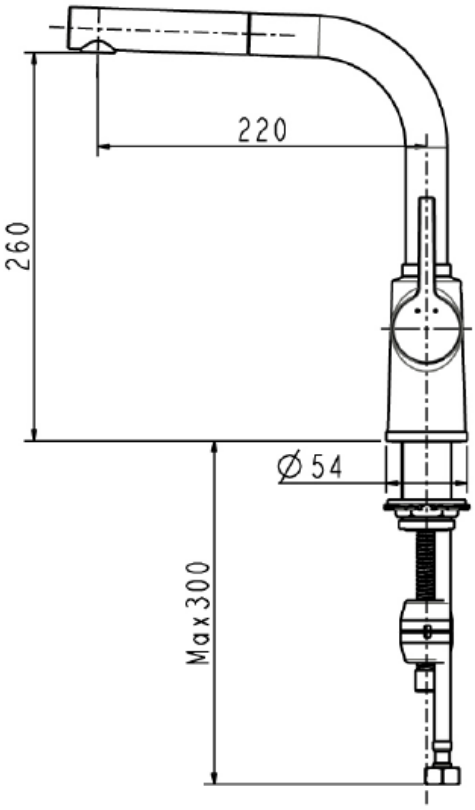

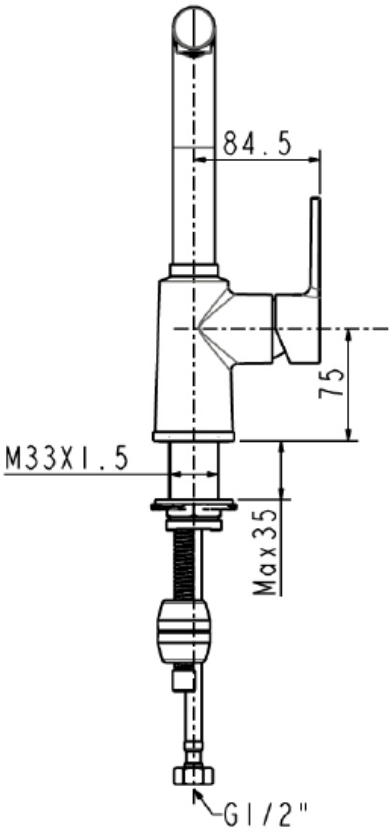

American Standard

Your Style, Your Way