Ovalyn
undercounter basin
TF-470LM

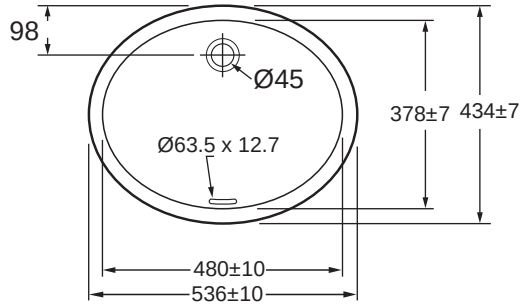

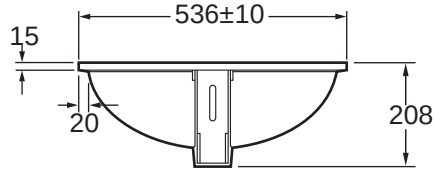

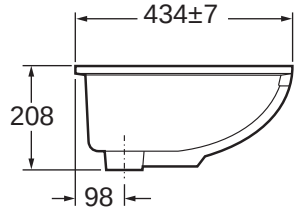

TF-470LM
- Under counter installation.
- Unglazed rim.
- Front overflow.
- Net weight : 8.7 kgs.
- Nominal dimensions : 536 x 432 x 208 mm.

American Standard
Luxury by Design