New Sibia-P Toilet
Close Coupled 3/4.5 LPF.
TF-2793H

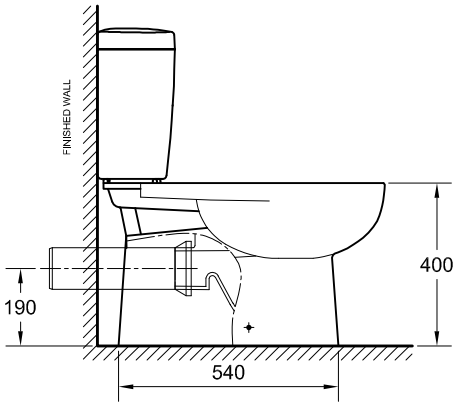

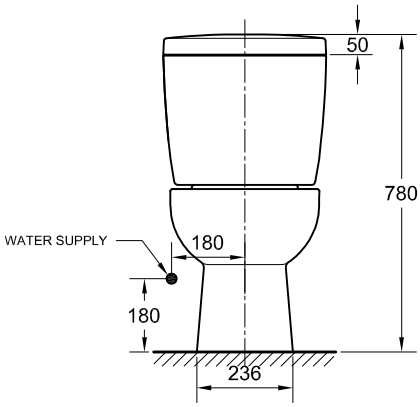

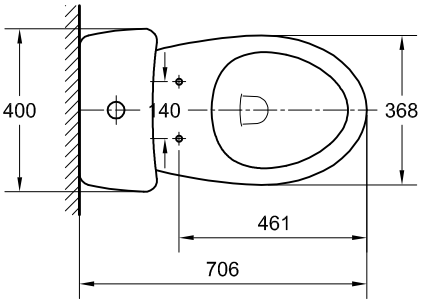

Shape : European Elongated Design
Out Let : H.O. Trapway
Water Consumption : 3/4.5 LPF. Dual Flush
Flushing Action : Washdown

American Standard